# AREO P

## TECHNICAL MANUAL for fan heaters in heating mode

EN


CE

Galletti
AIR CONDITIONING

## TABLE OF CONTENTS



# 1 GENERALITIES

**AERO P FAN HEATERS - HEATING MODE**

The units belonging to the AREO P series have been specifically designed for heating medium-size and large industrial buildings. The comfort conditions are reached quickly and effectively, with reduced energy consumption in accordance with the requirements of the European Regulation no. 327/2011 (ErP Directive).

The units of the AREO P range are available in 36 models, in 6 sizes equipped with 2-, 3- or 4-row heat exchangers ensuring an efficient performance with hot water (up to 95°C) supplied by a boiler or heat pump.

The AREO P range meets every type of installation requirements. All models are designed to be wall mounted (horizontal air flow) or ceiling mounted (vertical air flow).

# 2 INTENDED USE AND OPERATING LIMITS

Galletti S.p.A. will not accept any liability for damage or injury caused as a result of:
- installation by non-qualified personnel;
- improper use or use in conditions not allowed by the manufacturer;
- failure to perform the maintenance prescribed in this manual;
- use of spare parts other than original factory parts.

The operating limits are specified at the end of this chapter; usage outside the stated limits is to be considered improper.
When choosing an installation site, you should observe the following rules:
- The heating unit should not be placed immediately under a socket.

- do not install the unit in places where inflammable gases are present;
- do not expose the unit directly to sprays of water;
- install the unit on walls or ceilings able to withstand its weight; use accessories suited to the purpose and suitable screw anchors.

## OPERATING LIMITS

- Thermal carrier fluid: water
- Water temperature: max +95°C
- Air temperature: min -10°C, max + 60°C
- Supply voltage: rated voltage 230/400 VAC
- Max water pressure during operation: 10 bar

The technical and dimensional data provided herein may undergo changes in connection with product improvements.
Store the unit in its packing container until you are ready to install it to prevent dust from infiltrating inside it.

**Installation, maintenance and cleaning jobs may be carried out only with the power supply disconnected.**

If the unit is installed in a room that is only occasionally used, the temperature in the room itself must be kept above 0°C or else antifreeze must be added to the water to prevent it from freezing inside the coil.
Do not attempt to modify the internal wiring or other parts of the unit.

The range comprises 36 models whose features are summarised in the table of figure 1 where:

| | |
|---|---|
| $V_r$ | Number of motor revolutions |
| $Q_A$ | Air flow rate |
| $P_H$ | Heating capacity (80/75°C; 15°C) |
| $H_{max}$ | Maximum installation height |
| $L_{max}$ | Maximum range of treated air |
| $Lw_A$ | Sound power level |
| $P_{IN}$ | Power input |

## 3 UNIT DESCRIPTION

**AREO P** is an indoor unit for heating medium to large interiors with a horizontal discharge of warm air. It comprises the following main components:

- **Pre-painted steel sheet cabinet** complete with ABS corner trims.
  The cabinet is complete with adjustable aluminium louvers (spring-operated) placed on the air outlet which enable an optimal distribution of air within the room.
  On the rear of the cabinet there are 4 **brackets for suspending the fan heater** from the ceiling or joining it to the mounting board for installation on the wall (accessory DFC, DFP or DFO).
- **Heat exchanger,** made up of copper tubing and aluminium fins providing superior thermal conductivity compared to traditional iron pipe exchangers.
- **Electric motors**:
  two-speed, 4/6-pole or 6/8-pole, in 400V three-phase delta-triangle configuration.
  Single-phase MODELS are equipped with single-speed motors all motors are equipped with internal thermal protection (klixon), windings in class F. grade of protection IP54.
- **Axial fan** with statically balanced sickle blades housed in a specially designed compartment that enhances ventilation and reduces noise emissions.
- **Safety grille** made of electrogalvanised steel wire: it supports the motor and is fixed to the cabinet by means of vibration-damping supports.

Main components as shown in figure:

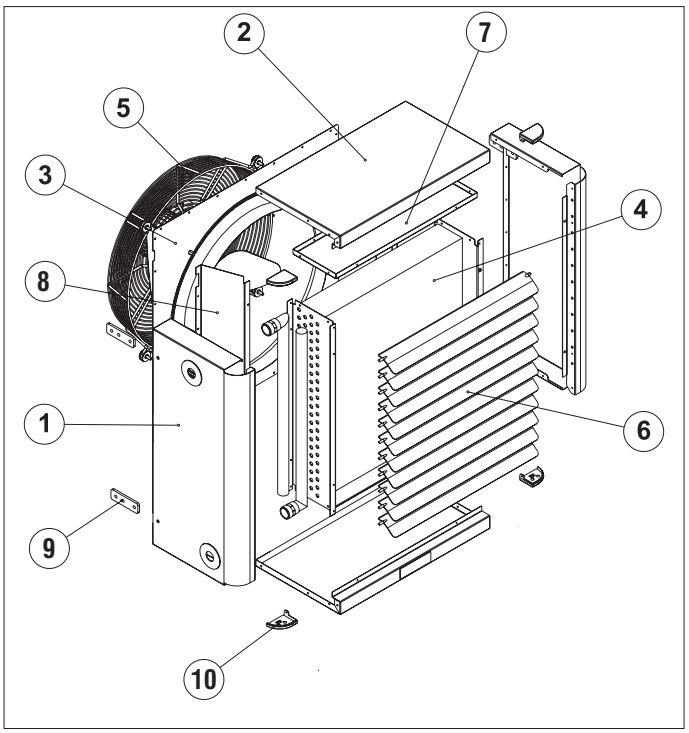


| | |
|---|---|
| (**1**) | Cabinet: side panel |
| (**2**) | Cabinet: upper/lower panel |
| (**3**) | Rear panel/fan compartment |
| (**4**) | Finned block heat exchanger (heat exchanger coil) |
| (**5** ) | Safety grille (fan) supporting motor |
| (**6**) | Adjustable louvers |
| (**7**) | Top cover of heat exchanger |
| (**8**) | Conveyor duct |
| (**9**) | Wall/ceiling mounting brackets |
| (**10**) | Plastic corner trim on cabinet |

## 4 ACCESSORIES AVAILABLE

**AREO** is complete with a wide range of accessories as control panels usually associated with fan coils, thanks to the use of 230V single-phase three-speed motors, a standard arrangement for all models and the operation system with chilled water.

**CONTROL PANELS FOR SINGLE-PHASE 230V MODELS**

**RVM** Single-phase speed regulator, wall mounting

**CONTROL PANELS FOR SINGLE-PHASE 400V MODELS**

**CST** Delta/star selector for installation in electric panels
**CSTP** Delta/star selector with duct for wall mounting

**AMBIENT THERMOSTATS**

**TA** Electromechanical ambient thermostat

**MOUNTING BOARDS**

**DFP** Wall-mounting board
**DFC** Column-mounting board
**DFO** Adjustable wall/column mounting board

**EXTERNAL AIR INTAKES**

**PAE** External air intake
**PAE M** Manual external air intake mixing louver
**PAE MM** Motor-driven external air intake mixing louver, 24V, IP 54 modulating motor, spring return
**CSD** Wall-mounted control for opening and closing the PAEMM motor-driven regulating valve
**GR** External air intake rain protection grille

**AIR DIFFUSERS**

**DO** Two-row fin diffuser
**R** Protective mesh for gyms (ball shield)
**LA** Air curtain diffuser

## 5 RATED TECHNICAL DATA

**Figure 1**

| Model | Power Supply | $V_r$ | Motor conn. | $Q_A$ | $P_H$ 15-85/75 °C | $Lw_A$ | $H_{max}$ | $L_{max}$ | $P_{IN}$ |
|---|---|---|---|---|---|---|---|---|---|
| | V-ph-Hz | poles | | m³/h | kW | dB(A) | m | m | W |
| **AREO 12 A4 1F** | 230-1-50 | 4 | Single | 1280 | 9.77 | 64 | 3 | 7 | 67 |
| **AREO 12 A6 1F** | 230-1-50 | 6 | Single | 1000 | 8.48 | 59 | 3 | 5 | 49 |
| **AREO 13 A4 1F** | 230-1-50 | 4 | Single | 1140 | 12.4 | 64 | 3 | 6.5 | 69 |
| **AREO 13 A6 1F** | 230-1-50 | 6 | Single | 900 | 10.7 | 59 | 3 | 4.5 | 50 |
| **AREO 14 A4 1F** | 230-1-50 | 4 | Single | 1040 | 14.2 | 65 | 3 | 6.5 | 70 |
| **AREO 14 A6 1F** | 230-1-50 | 6 | Single | 800 | 11.9 | 60 | 3 | 4.5 | 51 |
| **AREO 22 A4 1F** | 230-1-50 | 4 | Single | 3020 | 19.9 | 76 | 3.5 | 11 | 198 |
| **AREO 22 A6 1F** | 230-1-50 | 6 | Single | 2100 | 16.2 | 64 | 3.5 | 7.5 | 110 |
| **AREO 23 A4 1F** | 230-1-50 | 4 | Single | 2630 | 25.6 | 76 | 3.5 | 10 | 210 |
| **AREO 23 A6 1F** | 230-1-50 | 6 | Single | 1850 | 20.6 | 65 | 3.5 | 7 | 114 |
| **AREO 24 A4 1F** | 230-1-50 | 4 | Single | 2600 | 28.9 | 77 | 3.5 | 9.5 | 212 |
| **AREO 24 A6 1F** | 230-1-50 | 6 | Single | 1800 | 22.9 | 65 | 3.5 | 6.5 | 120 |
| **AREO 32 A4 1F** | 230-1-50 | 4 | Single | 4500 | 35.6 | 76 | 4.5 | 15.5 | 320 |
| **AREO 33 A4 1F** | 230-1-50 | 4 | Single | 4150 | 39.5 | 76 | 4.5 | 15 | 340 |
| **AREO 34 A4 1F** | 230-1-50 | 4 | Single | 4050 | 45.1 | 77 | 4 | 14.5 | 345 |
| **AREO 42 A4 1F** | 230-1-50 | 4 | Single | 6900 | 53.4 | 75 | 4.5 | 19 | 623 |
| **AREO 43 A4 1F** | 230-1-50 | 4 | Single | 6400 | 59.6 | 74 | 4.5 | 18 | 635 |
| **AREO 44 A4 1F** | 230-1-50 | 4 | Single | 6200 | 66.8 | 75 | 4 | 18 | 655 |
| **AREO 52 A6 1F** | 230-1-50 | 6 | Single | 6400 | 48.6 | 69 | 5 | 19 | 370 |
| **AREO 53 A6 1F** | 230-1-50 | 6 | Single | 6200 | 60.8 | 69 | 5 | 18 | 374 |
| **AREO 54 A6 1F** | 230-1-50 | 6 | Single | 5900 | 66.3 | 71 | 4.5 | 18 | 380 |
| **AREO 62 A6 1F** | 230-1-50 | 6 | Single | 8600 | 85.7 | 70 | 5.5 | 12.5 | 555 |
| **AREO 63 A6 1F** | 230-1-50 | 6 | Single | 8100 | 79.3 | 70 | 5.5 | 11.5 | 560 |
| **AREO 64 A6 1F** | 230-1-50 | 6 | Single | 7500 | 99.6 | 71 | 5 | 10.5 | 582 |
| **AREO 32 A4 3F** | 400-3-50 | 4 | Delta | 4300 | 34.7 | 76 | 4.5 | 15.5 | 315 |
| | | 6 | Star | 3200 | 29.2 | 69 | 4 | 9.5 | 175 |
| **AREO 33 A4 3F** | 400-3-50 | 4 | Delta | 4000 | 38.6 | 76 | 4.5 | 14.5 | 330 |
| | | 6 | Star | 2900 | 31.8 | 69 | 4 | 9 | 180 |
| **AREO 34 A4 3F** | 400-3-50 | 4 | Delta | 3900 | 44.0 | 77 | 4 | 14 | 340 |
| | | 6 | Star | 2800 | 35.6 | 70 | 3.5 | 8.5 | 182 |
| **AREO 42 A4 3F** | 400-3-50 | 4 | Delta | 7100 | 54.3 | 73 | 4.5 | 18 | 650 |
| | | 6 | Star | 5600 | 47.4 | 67 | 4 | 11.5 | 450 |
| **AREO 43 A4 3F** | 400-3-50 | 4 | Delta | 6550 | 60.4 | 74 | 4 | 17.5 | 690 |
| | | 6 | Star | 5300 | 53.2 | 68 | 3.5 | 10.5 | 465 |
| **AREO 44 A4 3F** | 400-3-50 | 4 | Delta | 6400 | 68.1 | 75 | 4 | 17 | 700 |
| | | 6 | Star | 5150 | 59.5 | 69 | 3.5 | 10 | 470 |
| **AREO 52 A4 3F** | 400-3-50 | 4 | Delta | 8200 | 55.9 | 75 | 5 | 18 | 725 |
| | | 6 | Star | 6800 | 50.3 | 71 | 4.5 | 12 | 760 |
| **AREO 53 A4 3F** | 400-3-50 | 4 | Delta | 7900 | 70.2 | 76 | 5 | 17.5 | 732 |
| | | 6 | Star | 6450 | 62.3 | 72 | 4 | 11 | 775 |
| **AREO 54 A4 3F** | 400-3-50 | 4 | Delta | 7600 | 77.4 | 77 | 4.5 | 17 | 755 |
| | | 6 | Star | 6200 | 68.3 | 73 | 4 | 10 | 780 |
| **AREO 62 A6 3F** | 400-3-50 | 6 | Delta | 8900 | 87.5 | 71 | 5.5 | 12 | 565 |
| | | 8 | Star | 7100 | 76.2 | 66 | 5 | 10 | 360 |
| **AREO 63 A6 3F** | 400-3-50 | 6 | Delta | 8300 | 101 | 72 | 5.5 | 11 | 575 |
| | | 8 | Star | 6500 | 86.4 | 67 | 5 | 9.5 | 380 |
| **AREO 64 A6 3F** | 400-3-50 | 6 | Delta | 7650 | 101 | 72 | 5 | 10.5 | 590 |
| | | 8 | Star | 6000 | 85.8 | 67 | 4.5 | 9 | 390 |

**NOTES**

Heating: water temperature 85-75°C, air temperature 15°C
Sound power level measured at a distance of 5 m with a directivity factor of 2

**Fan speed:**
**4 p**= 4 poles, 1400 rpm
**6 p**= 6 poles, 900 rpm
**8 p**= 8 poles, 700 rpm

## 6 HEATING CAPACITY

In order to define the performances of AREO P subject to conditions different from rated conditions, a computer program for the correct choice of the units is provided by Galletti SpA.

With a few input data it will be possible to get information on the behaviour of an AREO P referring to the desired operating conditions.

It will be sufficient to enter the following data:
- Dry bulb inlet air temperature
- Wet bulb inlet air temperature or alternatively the relative humidity
- Inlet water temperature
- Outlet water temperature or alternatively the water flow
- Ethylene glycol percentage (default 0)
- Fan speed
- Available static head (default 0)
- Directivity factor and distance

Output data
- Air flow rate
- Total cooling / heating capacity
- Sensible cooling capacity
- Water flow
- Pressure drop, water side
- Outlet air temperature
- Sound power level
- Sound pressure level under the specified conditions
- Power input

The selection report generated by the software includes the drawing with overall dimensions and description of the unit.

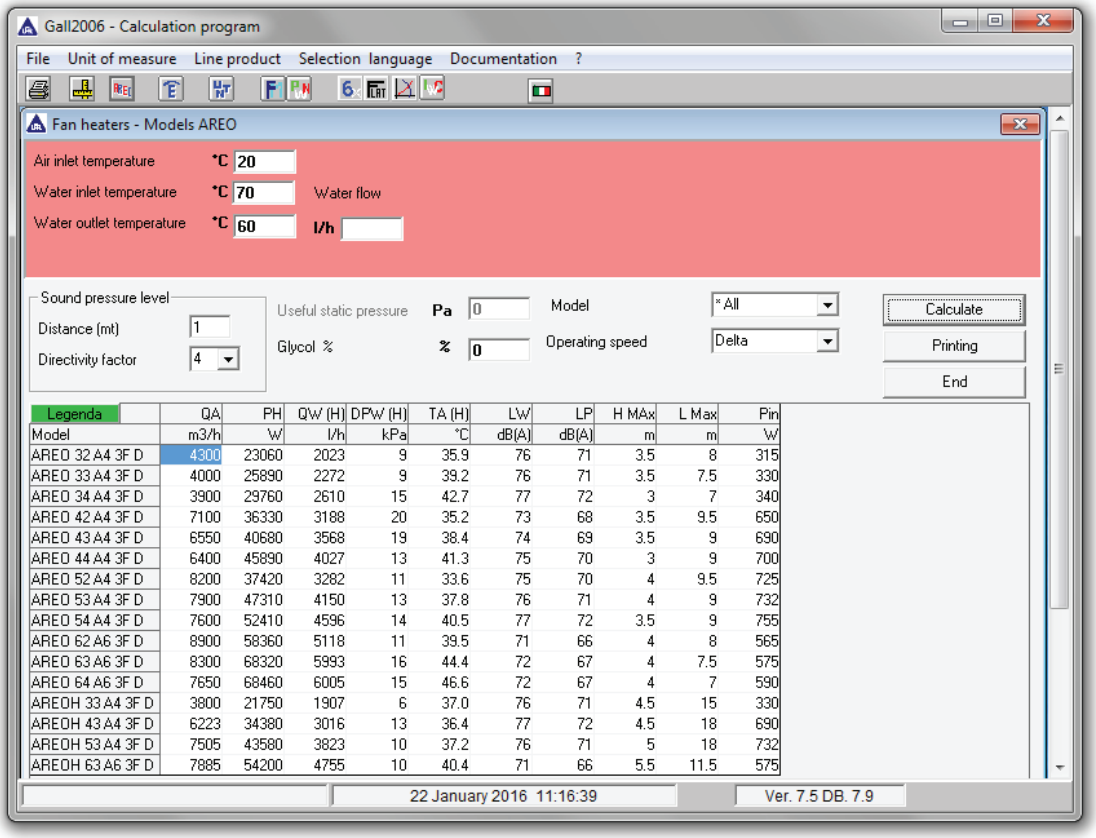


| Legenda | QA | PH | QW (H) | DPW (H) | TA (H) | LW | LP | H MAx | L Max | Pin |
|---|---|---|---|---|---|---|---|---|---|---|
| Model | m3/h | W | l/h | kPa | °C | dB(A) | dB(A) | m | m | W |
| AREO 32 A4 3F D | 4300 | 23060 | 2023 | 9 | 35.9 | 76 | 71 | 3.5 | 8 | 315 |
| AREO 33 A4 3F D | 4000 | 25890 | 2272 | 9 | 39.2 | 76 | 71 | 3.5 | 7.5 | 330 |
| AREO 34 A4 3F D | 3900 | 29760 | 2610 | 15 | 42.7 | 77 | 72 | 3 | 7 | 340 |
| AREO 42 A4 3F D | 7100 | 36330 | 3188 | 20 | 35.2 | 73 | 68 | 3.5 | 9.5 | 650 |
| AREO 43 A4 3F D | 6550 | 40680 | 3568 | 19 | 38.4 | 74 | 69 | 3.5 | 9 | 690 |
| AREO 44 A4 3F D | 6400 | 45890 | 4027 | 13 | 41.3 | 75 | 70 | 3 | 9 | 700 |
| AREO 52 A4 3F D | 8200 | 37420 | 3282 | 11 | 33.6 | 75 | 70 | 4 | 9.5 | 725 |
| AREO 53 A4 3F D | 7900 | 47310 | 4150 | 13 | 37.8 | 76 | 71 | 4 | 9 | 732 |
| AREO 54 A4 3F D | 7600 | 52410 | 4596 | 14 | 40.5 | 77 | 72 | 3.5 | 9 | 755 |
| AREO 62 A6 3F D | 8900 | 58360 | 5118 | 11 | 39.5 | 71 | 66 | 4 | 8 | 565 |
| AREO 63 A6 3F D | 8300 | 68320 | 5993 | 16 | 44.4 | 72 | 67 | 4 | 7.5 | 575 |
| AREO 64 A6 3F D | 7650 | 68460 | 6005 | 15 | 46.6 | 72 | 67 | 4 | 7 | 590 |
| AREOH 33 A4 3F D | 3800 | 21750 | 1907 | 6 | 37.0 | 76 | 71 | 4.5 | 15 | 330 |
| AREOH 43 A4 3F D | 6223 | 34380 | 3016 | 13 | 36.4 | 77 | 72 | 4.5 | 18 | 690 |
| AREOH 53 A4 3F D | 7505 | 43580 | 3823 | 10 | 37.2 | 76 | 71 | 5 | 18 | 732 |
| AREOH 63 A6 3F D | 7885 | 54200 | 4755 | 10 | 40.4 | 71 | 66 | 5.5 | 11.5 | 575 |

## 7 SOUND LEVELS

**$Lw_A$** Total sound power level, weighted A

| AREO P | $Lw_A$ | 125 Hz | 250 Hz | 500 Hz | 1000 Hz | 2000 Hz | 4000 Hz | 8000 Hz |
|---|---|---|---|---|---|---|---|---|
| | dB(A) | dB lin | dB lin | dB lin | dB lin | dB lin | dB lin | dB lin |
| **AREO 12 A4 1F** | 64 | 62.2 | 64.7 | 60.6 | 58.2 | 55.0 | 54.6 | 50.7 |
| **AREO 12 A6 1F** | 59 | 57.2 | 59.7 | 55.6 | 53.2 | 50.0 | 49.6 | 45.7 |
| **AREO 13 A4 1F** | 64 | 62.2 | 64.7 | 60.6 | 58.2 | 55.0 | 54.6 | 50.7 |
| **AREO 13 A6 1F** | 59 | 57.2 | 59.7 | 55.6 | 53.2 | 50.0 | 49.6 | 45.7 |
| **AREO 14 A4 1F** | 65 | 63.2 | 65.7 | 61.6 | 59.2 | 56.0 | 55.6 | 51.7 |
| **AREO 14 A6 1F** | 60 | 58.2 | 60.7 | 56.6 | 54.2 | 51.0 | 50.6 | 46.7 |
| **AREO 22 A4 1F** | 76 | 74.2 | 76.7 | 72.6 | 70.2 | 67.0 | 66.6 | 62.7 |
| **AREO 22 A6 1F** | 64 | 62.2 | 64.7 | 60.6 | 58.2 | 55.0 | 54.6 | 50.7 |
| **AREO 23 A4 1F** | 76 | 74.2 | 76.7 | 72.6 | 70.2 | 67.0 | 66.6 | 62.7 |
| **AREO 23 A6 1F** | 65 | 63.2 | 65.7 | 61.6 | 59.2 | 56.0 | 55.6 | 51.7 |
| **AREO 24 A4 1F** | 77 | 75.2 | 77.7 | 73.6 | 71.2 | 68.0 | 67.6 | 63.7 |
| **AREO 24 A6 1F** | 65 | 63.2 | 65.7 | 61.6 | 59.2 | 56.0 | 55.6 | 51.7 |
| **AREO 32 A4 1F** | 76 | 74.2 | 76.7 | 72.6 | 70.2 | 67.0 | 66.6 | 62.7 |
| **AREO 33 A4 1F** | 76 | 74.2 | 76.7 | 72.6 | 70.2 | 67.0 | 66.6 | 62.7 |
| **AREO 34 A4 1F** | 77 | 75.2 | 77.7 | 73.6 | 71.2 | 68.0 | 67.6 | 63.7 |
| **AREO 42 A4 1F** | 75 | 73.2 | 75.7 | 71.6 | 69.2 | 66.0 | 65.6 | 61.7 |
| **AREO 43 A4 1F** | 74 | 72.2 | 74.7 | 70.6 | 68.2 | 65.0 | 64.6 | 60.7 |
| **AREO 44 A4 1F** | 75 | 73.2 | 75.7 | 71.6 | 69.2 | 66.0 | 65.6 | 61.7 |
| **AREO 52 A6 1F** | 69 | 67.2 | 69.7 | 65.6 | 63.2 | 60.0 | 59.6 | 55.7 |
| **AREO 53 A6 1F** | 69 | 67.2 | 69.7 | 65.6 | 63.2 | 60.0 | 59.6 | 55.7 |
| **AREO 54 A6 1F** | 71 | 69.2 | 71.7 | 67.6 | 65.2 | 62.0 | 61.6 | 57.7 |
| **AREO 62 A6 1F** | 70 | 68.2 | 70.7 | 66.6 | 64.2 | 61.0 | 60.6 | 56.7 |
| **AREO 63 A6 1F** | 70 | 68.2 | 70.7 | 66.6 | 64.2 | 61.0 | 60.6 | 56.7 |
| **AREO 64 A6 1F** | 71 | 69.2 | 71.7 | 67.6 | 65.2 | 62.0 | 61.6 | 57.7 |
| **AREO 32 A4 3F - Δ** | 76 | 74.2 | 76.7 | 72.6 | 70.2 | 67.0 | 66.6 | 62.7 |
| **AREO 32 A4 3F - Y** | 69 | 67.2 | 69.7 | 65.6 | 63.2 | 60.0 | 59.6 | 55.7 |
| **AREO 33 A4 3F - Δ** | 76 | 74.2 | 76.7 | 72.6 | 70.2 | 67.0 | 66.6 | 62.7 |
| **AREO 33 A4 3F - Y** | 69 | 67.2 | 69.7 | 65.6 | 63.2 | 60.0 | 59.6 | 55.7 |
| **AREO 34 A4 3F - Δ** | 77 | 75.2 | 77.7 | 73.6 | 71.2 | 68.0 | 67.6 | 63.7 |
| **AREO 34 A4 3F - Y** | 70 | 68.2 | 70.7 | 66.6 | 64.2 | 61.0 | 60.6 | 56.7 |
| **AREO 42 A4 3F - Δ** | 73 | 71.2 | 73.7 | 69.6 | 67.2 | 64.0 | 63.6 | 59.7 |
| **AREO 42 A4 3F - Y** | 67 | 65.2 | 67.7 | 63.6 | 61.2 | 58.0 | 57.6 | 53.7 |
| **AREO 43 A4 3F - Δ** | 74 | 72.2 | 74.7 | 70.6 | 68.2 | 65.0 | 64.6 | 60.7 |
| **AREO 43 A4 3F - Y** | 68 | 66.2 | 68.7 | 64.6 | 62.2 | 59.0 | 58.6 | 54.7 |
| **AREO 44 A4 3F - Δ** | 75 | 73.2 | 75.7 | 71.6 | 69.2 | 66.0 | 65.6 | 61.7 |
| **AREO 44 A4 3F - Y** | 69 | 67.2 | 69.7 | 65.6 | 63.2 | 60.0 | 59.6 | 55.7 |
| **AREO 52 A4 3F - Δ** | 75 | 73.2 | 75.7 | 71.6 | 69.2 | 66.0 | 65.6 | 61.7 |
| **AREO 52 A4 3F - Y** | 71 | 69.2 | 71.7 | 67.6 | 65.2 | 62.0 | 61.6 | 57.7 |
| **AREO 53 A4 3F - Δ** | 76 | 74.2 | 76.7 | 72.6 | 70.2 | 67.0 | 66.6 | 62.7 |
| **AREO 53 A4 3F - Y** | 72 | 70.2 | 72.7 | 68.6 | 66.2 | 63.0 | 62.6 | 58.7 |
| **AREO 54 A4 3F - Δ** | 77 | 75.2 | 77.7 | 73.6 | 71.2 | 68.0 | 67.6 | 63.7 |
| **AREO 54 A4 3F - Y** | 73 | 71.2 | 73.7 | 69.6 | 67.2 | 64.0 | 63.6 | 59.7 |
| **AREO 62 A6 3F - Δ** | 71 | 69.2 | 71.7 | 67.6 | 65.2 | 62.0 | 61.6 | 57.7 |
| **AREO 62 A6 3F - Y** | 66 | 64.2 | 66.7 | 62.6 | 60.2 | 57.0 | 56.6 | 52.7 |
| **AREO 63 A6 3F - Δ** | 72 | 70.2 | 72.7 | 68.6 | 66.2 | 63.0 | 62.6 | 58.7 |
| **AREO 63 A6 3F - Y** | 67 | 65.2 | 67.7 | 63.6 | 61.2 | 58.0 | 57.6 | 53.7 |
| **AREO 64 A6 3F - Δ** | 72 | 70.2 | 72.7 | 68.6 | 66.2 | 63.0 | 62.6 | 58.7 |
| **AREO 64 A6 3F - Y** | 67 | 65.2 | 67.7 | 63.6 | 61.2 | 58.0 | 57.6 | 53.7 |

## 8 FAN CHARACTERISTICS

Adjustment factors refer to models without air outlet fins.
Multiply the air flow rate by the $F_1$ factor and the capacity by the $F_2$ factor.

$P_{su}$ Available static pressure
$V_r$ Fan speed:
**4p** = 4 poles, 1400 rpm
**6p** = 6 poles, 900 rpm
$F_1$ Air flow rate adjustment factor
$F_2$ Capacity adjustment factor

| Model | $P_{su}$ | 10 Pa | | 20 Pa | | 30 Pa | | 40 Pa | | 50Pa | |
|---|---|---|---|---|---|---|---|---|---|---|---|
| | $V_r$ | $F_1$ | $F_2$ | $F_1$ | $F_2$ | $F_1$ | $F_2$ | $F_1$ | $F_2$ | $F_1$ | $F_2$ |
| AREO P 12-13-14 | 4P | 0.81 | 0.87 | 0.72 | 0.87 | - | - | - | - | - | - |
| | 6P | 0.59 | 0.79 | - | - | - | - | - | - | - | - |
| AREO P 22-23-24 | 4P | 0.92 | 0.95 | 0.86 | 0.91 | 0.78 | 0.86 | 0.67 | 0.78 | - | - |
| | 6P | 0.84 | 0.91 | 0.56 | 0.76 | - | - | - | - | - | - |
| AREO P 32-33-34 | 4P | 0.98 | 0.98 | 0.93 | 0.95 | 0.89 | 0.93 | 0.85 | 0.90 | 0.77 | 85.00 |
| | 6P | 0.89 | 0.94 | 0.78 | 0.88 | - | - | - | - | - | - |
| AREO P 42-43-44 | 4P | 0.97 | 0.98 | 0.95 | 0.97 | 0.91 | 0.94 | 0.88 | 0.92 | 0.84 | 0.90 |
| | 6P | 0.87 | 0.93 | 0.82 | 0.90 | 0.67 | 0.81 | - | - | - | - |
| AREO P 52-53-54 | 4P | 0.99 | 0.99 | 0.97 | 0.98 | 0.96 | 0.97 | 0.92 | 0.95 | 0.89 | 0.93 |
| | 6P | 0.95 | 0.97 | 0.89 | 0.94 | 0.84 | 0.91 | - | - | - | - |
| AREO P 62-63-64 | 6P | 0.94 | 0.96 | 0.89 | 0.92 | 0.83 | 0.88 | 0.69 | 0.79 | - | - |

For all work points not listed in the table, refer to the Galletti selection program.

## 9 INSTALLATION HEIGHTS FOR WALL MOUNTING

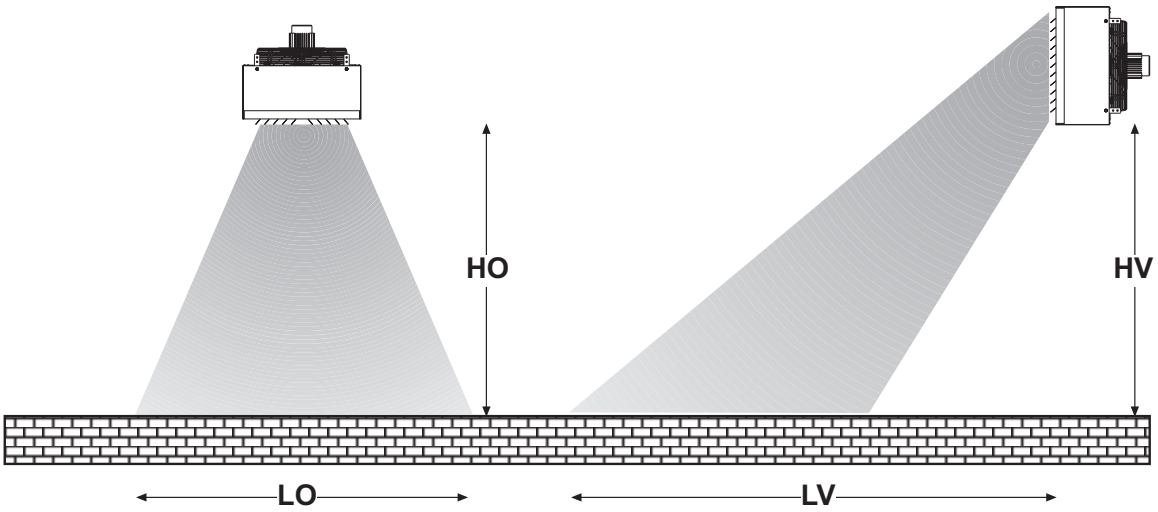


| | 1400 rpm | | 900 rpm | | 700 rpm | | 1400 rpm | | 900 rpm | | 700 rpm | |
|---|---|---|---|---|---|---|---|---|---|---|---|---|
| | HV (m) | LV (m) | HV (m) | LV (m) | HV (m) | LV (m) | HO (m) | LO (m) | HO (m) | LO (m) | HO (m) | LO (m) |
| **AREO P 12** | 3.0 | 7.0 | 3.0 | 5.0 | 3.0 | 4.0 | 3.5 | 5.5 | - | - | - | - |
| **AREO P 13** | 3.0 | 6.5 | 3.0 | 4.5 | 3.0 | 3.5 | 3.5 | 5.5 | - | - | - | - |
| **AREO P 14** | 3.0 | 6.5 | 3.0 | 4.5 | 2.5 | 3.0 | 3.5 | 5.5 | - | - | - | - |
| **AREO P 22** | 3.5 | 11.0 | 3.5 | 7.5 | 3.5 | 5.5 | 4.0 | 7.0 | 3.5 | 5.5 | 3.0 | 4.0 |
| **AREO P 23** | 3.5 | 10.0 | 3.5 | 7.0 | 3.5 | 5.0 | 4.0 | 7.0 | 3.5 | 5.0 | 3.0 | 4.0 |
| **AREO P 24** | 3.5 | 9.5 | 3.5 | 6.5 | 3.5 | 4.5 | 4.0 | 7.0 | 3.5 | 5.0 | 3.0 | 4.0 |
| **AREO P 32** | 4.5 | 15.5 | 4.0 | 9.5 | 3.5 | 8.0 | 5.0 | 12.0 | 4.0 | 7.5 | 3.5 | 5.0 |
| **AREO P 33** | 4.5 | 15.0 | 4.0 | 9.0 | 3.5 | 7.5 | 5.0 | 12.0 | 4.0 | 7.5 | 3.5 | 5.0 |
| **AREO P 34** | 4.0 | 14.5 | 3.5 | 8.5 | 3.0 | 7.0 | 5.0 | 12.0 | 4.0 | 7.5 | 3.5 | 4.5 |
| **AREO P 42** | 4.5 | 19.0 | 4.0 | 11.5 | 3.5 | 9.5 | 5.5 | 12.0 | 4.0 | 8.0 | 3.5 | 6.5 |
| **AREO P 43** | 4.5 | 18.0 | 3.5 | 10.5 | 3.5 | 9.0 | 5.5 | 12.0 | 4.0 | 8.0 | 3.5 | 6.5 |
| **AREO P 44** | 4.0 | 18.0 | 3.5 | 10.0 | 3.0 | 9.0 | 5.5 | 12.0 | 4.0 | 8.0 | 3.5 | 6.0 |
| **AREO P 52** | 5.0 | 19.0 | 4.5 | 12.0 | 4.0 | 9.5 | 6.0 | 12.0 | 5.5 | 7.0 | 5.0 | 6.0 |
| **AREO P 53** | 5.0 | 18.0 | 4.0 | 11.0 | 4.0 | 9.0 | 6.0 | 12.0 | 5.5 | 7.0 | 5.0 | 6.0 |
| **AREO P 54** | 4.5 | 18.0 | 4.0 | 10.0 | 3.5 | 9.0 | 6.0 | 12.0 | 5.5 | 7.0 | 5.0 | 6.0 |
| **AREO P 62** | - | - | 5.5 | 12.5 | 5.0 | 10.0 | - | - | 6.0 | 11.0 | 5.0 | 8.0 |
| **AREO P 63** | - | - | 5.5 | 11.5 | 5.0 | 9.5 | - | - | 6.0 | 11.0 | 5.0 | 8.0 |
| **AREO P 64** | - | - | 5.0 | 10.5 | 4.5 | 9.0 | - | - | 6.0 | 11.0 | 5.0 | 8.0 |

10

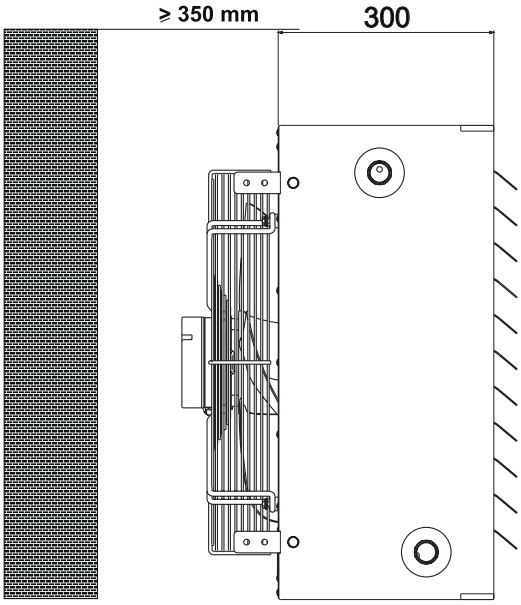

## 10 OVERALL DIMENSIONS

**AREO P** Basic unit

**Legend**

(**1**) Water inlet connection (male gas coupling)
(**2**) Water outlet connection (male gas coupling)
(**3**) Condensate drainage connection

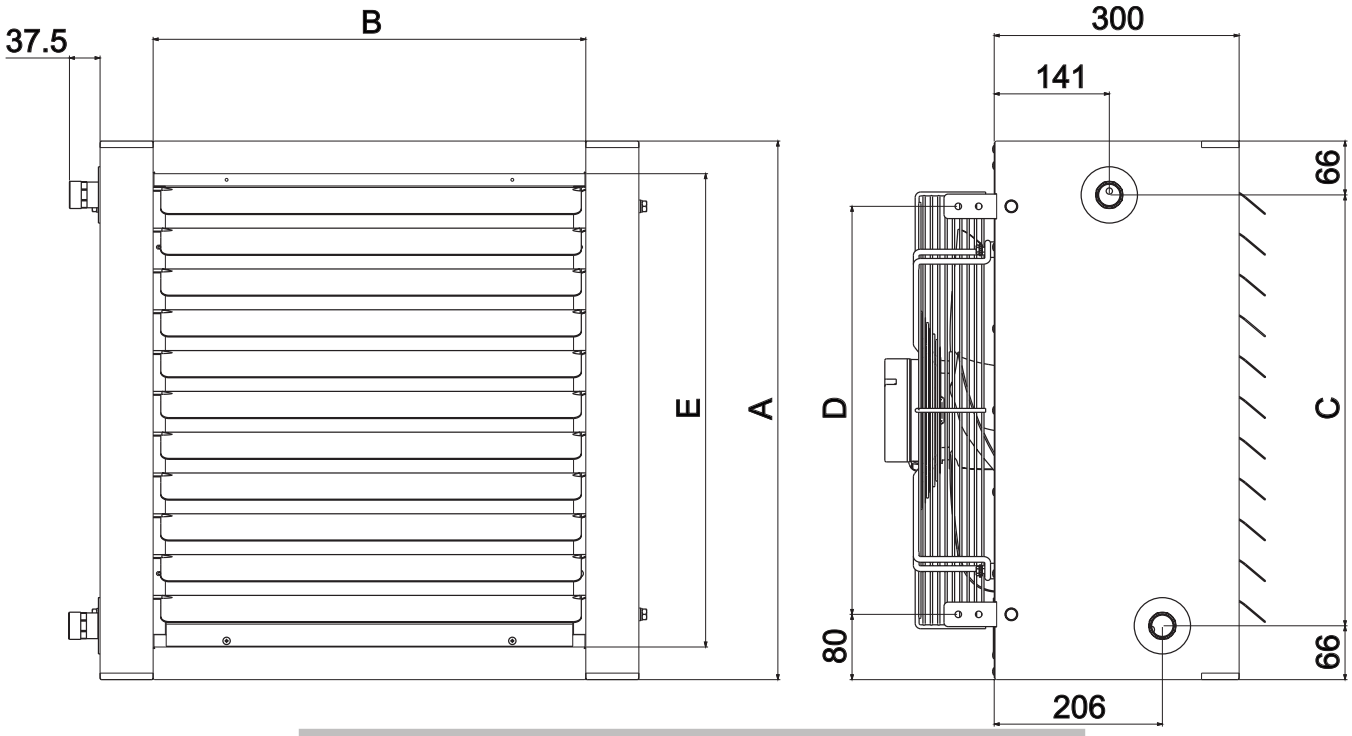


| AREO P | A (mm) | B (mm) | C (mm) | D (mm) | E (mm) | Φ 1 | Φ 2 |
|---|---|---|---|---|---|---|---|
| 12 - 13 - 14 | 460 | 330 | 328 | 300 | 380 | 3/4" | 3/4" |
| 22 - 23 - 24 | 560 | 430 | 428 | 400 | 480 | 3/4" | 3/4" |
| 32 - 33 - 34 | 660 | 530 | 528 | 500 | 580 | 1" | 1" |
| 42 - 43 - 44 | 760 | 630 | 628 | 600 | 680 | 1" | 1" |
| 52 - 53 - 54 | 860 | 730 | 728 | 700 | 780 | 1"1/4 | 1"1/4 |
| 62 - 63 - 64 | 960 | 830 | 828 | 800 | 880 | 1"1/4 | 1"1/4 |

**GR** Protection grilles

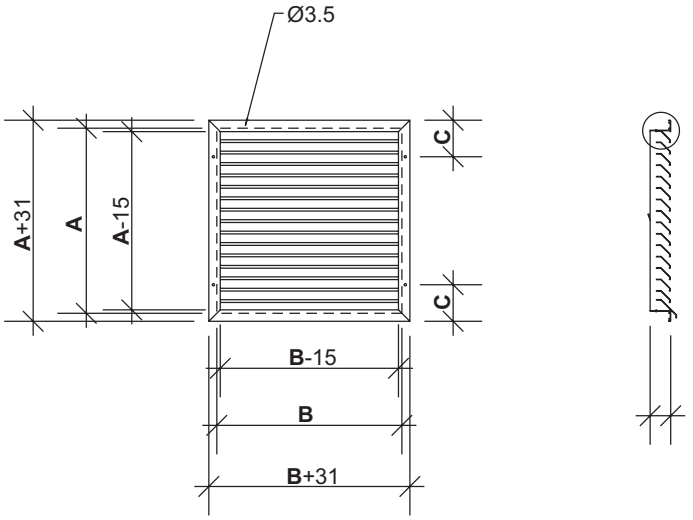


| GR | Model | A (mm) | B (mm) | C (mm) |
|---|---|---|---|---|
| AYGR1 | AREO P 12 - 13 - 14 | 400 | 400 | 80 |
| AYGR2 | AREO P 22 - 23 - 24 | 500 | 500 | 80 |
| AYGR3 | AREO P 32 - 33 - 34 | 600 | 600 | 80 |
| AYGR4 | AREO P 42 - 43 - 44 | 700 | 700 | 80 |
| AYGR5 | AREO P 52 - 53 - 54 | 800 | 800 | 80 |
| AYGR6 | AREO P 62 - 63 - 64 | 900 | 900 | 80 |

## 10 OVERALL DIMENSIONS

**PAE** External air intake

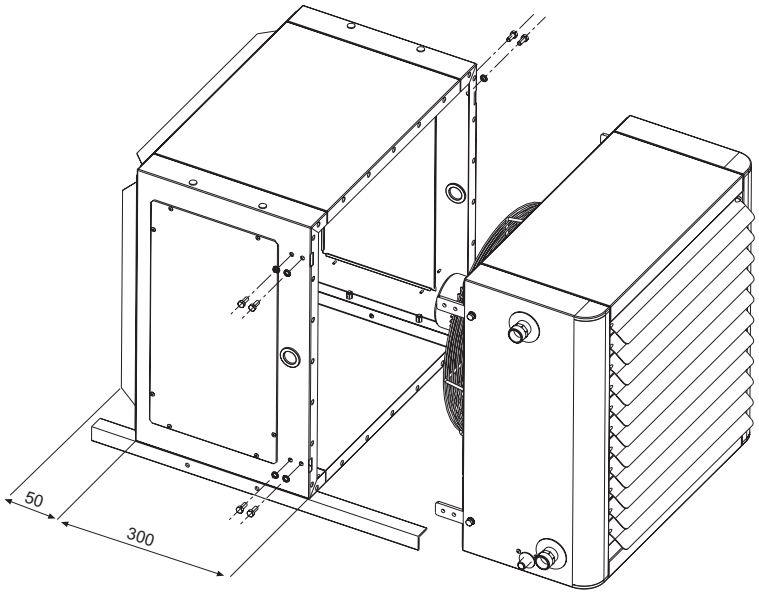


| PAE | Model | air intake | wall hole |
|---|---|---|---|
| **AYPAE1** | **AREO P 12 - 13 - 14** | 392 X 392 | 400 x 400 |
| **AYPAE2** | **AREO P 22 - 23 - 24** | 492 x 492 | 500 x 500 |
| **AYPAE3** | **AREO P 32 - 33 - 34** | 592 x 592 | 600 x 600 |
| **AYPAE4** | **AREO P 42 - 43 - 44** | 692 x 692 | 700 x 700 |
| **AYPAE5** | **AREO P 52 - 53 - 54** | 792 x 792 | 800 x 800 |
| **AYPAE6** | **AREO P 62 - 63 - 64** | 892 x 892 | 900 x 900 |

**PAE M - PAE MM** External air intake mixing louvers

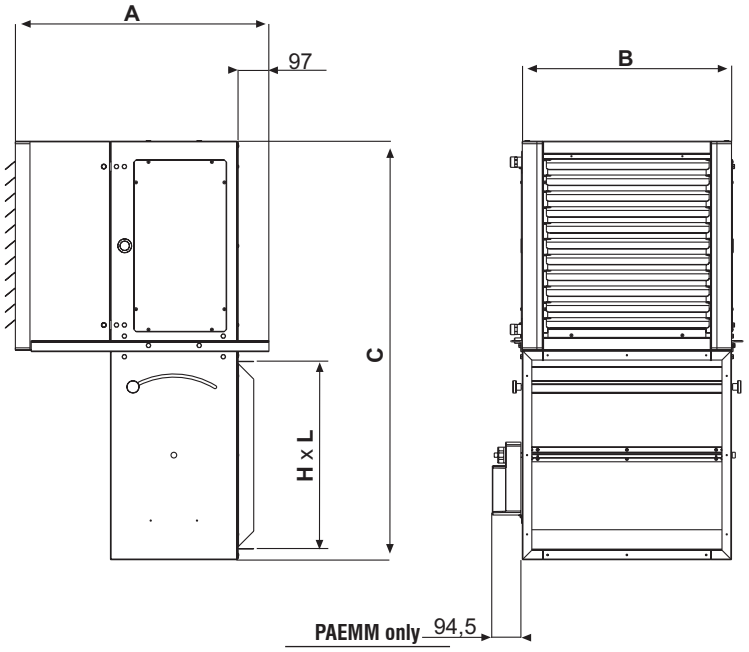


| PAEM | PAEMM | Model | A | B | C | Air intake | Wall hole |
|---|---|---|---|---|---|---|---|
| **AYPAEM1** | **AYPAEMM1** | **AREO P 12 - 13 - 14** | 700 | 460 | 920 | 392 X 392 | 400 x 400 |
| **AYPAEM2** | **AYPAEMM2** | **AREO P 22 - 23 - 24** | 700 | 560 | 1120 | 492 x 492 | 500 x 500 |
| **AYPAEM3** | **AYPAEMM3** | **AREO P 32 - 33 - 34** | 800 | 660 | 1320 | 592 x 592 | 600 x 600 |
| **AYPAEM4** | **AYPAEMM4** | **AREO P 42 - 43 - 44** | 800 | 760 | 1520 | 692 x 692 | 700 x 700 |
| **AYPAEM5** | **AYPAEMM5** | **AREO P 52 - 53 - 54** | 900 | 860 | 1720 | 792 x 792 | 800 x 800 |
| **AYPAEM6** | **AYPAEMM6** | **AREO P 62 - 63 - 64** | 900 | 960 | 1920 | 892 x 892 | 900 x 900 |

## 11 ELECTRICAL CONNECTIONS

The standard motors installed in AREO fan heaters are of the closed type: asynchronous three-phase 2-speed motors (400/400 V Y∆connection) or single-phase one speed motors.
400/400 V – Y∆ motors are equipped internally with a thermal cutout and speeds are selected by means of a normal star-delta selector (accessory CST) (figure 15).
The terminals of the cutouts are connected to the terminal block so that they can be used as protection in series with the coil of a contactor (TOP on the terminal block, fig. 9, 10 and 11.
If the internal cutout is not used to protect the motor, it will be necessary to provide a motor overload cutout set at a current that is 10-15% higher than the current indicated on the unit rating plate. Make the electrical connections with the power supply disconnected, in accordance with current safety regulations. All the wiring must be done by qualified personnel.
Check that the mains electricity supply is compatible with the voltage shown on the unit rating plate.
Scrupulously follow the wiring diagram provided, according to the type of installation.
**Each fan heater requires an omnipolar main switch classified as overvoltage category III to be mounted on the power supply line.**
The table in figure 8 shows the electrical specifications of the motors, where:

| | |
|---|---|
| **$V_r$** | Number of poles of motor |
| **POWER** | Supply voltage |
| **$P_{IN}$** | Electrical input |
| **$I_{IN}$** | Absorbed current |

The wiring layouts are shown in the figures from 9 to 15:
**9**) Delta connection to terminal block of 400/400 V – Y∆ motors, high speed.
**10**) Star connection to terminal block of 400/400 V – Y∆ motors, low speed.
**11)** Connection to terminal board of single-phase motors.
**12)** Wiring diagram showing connection of a single-phase 230V motor.
**13)** Wiring diagram showing connection of a three-phase 400V motor.
**15)** Wiring diagram showing connection of 400/400 V motor, with delta-star selector (Y∆).

Legend of wiring diagrams:

| | |
|---|---|
| **CST** | Delta-star selector |
| **FL** | Protective fuse (NOT SUPPLIED) |
| **IL** | Circuit breaker (NOT SUPPLIED) |
| **M** | Motor |
| **TA-TA2** | Ambient thermostat |
| **K** | Relay (not supplied) |

**If single-phase fan heaters are installed on a three-phase line, they must be connected so as to ensure an equal distribution over the 3 phases: this will ensure a balanced load.**

| Frame | Model | Power V-ph-Hz | $V_r$ poles | $P_{IN}$ W | $I_{IN}$ A |
|---|---|---|---|---|---|
| 1 | **AREO 12 A6 1F** | 230-1-50 | 6p | 49 | 0.22 |
| | **AREO 13 A6 1F** | 230-1-50 | 6p | 50 | 0.22 |
| | **AREO 14 A6 1F** | 230-1-50 | 6p | 51 | 0.22 |
| | **AREO 12 A4 1F** | 230-1-50 | 4p | 67 | 0.29 |
| | **AREO 13 A4 1F** | 230-1-50 | 4p | 69 | 0.31 |
| | **AREO 14 A4 1F** | 230-1-50 | 4p | 70 | 0.32 |
| 2 | **AREO 22 A6 1F** | 230-1-50 | 6p | 110 | 0.49 |
| | **AREO 23 A6 1F** | 230-1-50 | 6p | 114 | 0.5 |
| | **AREO 24 A6 1F** | 230-1-50 | 6p | 120 | 0.53 |
| | **AREO 22 A4 1F** | 230-1-50 | 4p | 198 | 0.88 |
| | **AREO 23 A4 1F** | 230-1-50 | 4p | 210 | 0.93 |
| | **AREO 24 A4 1F** | 230-1-50 | 4p | 212 | 0.95 |
| 3 | **AREO 32 A4 1F** | 230-1-50 | 4p | 320 | 1.4 |
| | **AREO 33 A4 1F** | 230-1-50 | 4p | 340 | 1.49 |
| | **AREO 34 A4 1F** | 230-1-50 | 4p | 345 | 1.51 |
| | **AREO 32 A4 3F** | 400-3-50 | 4p | 315 | 0.55 |
| | **AREO 33 A4 3F** | 400-3-50 | 4p | 330 | 0.56 |
| | **AREO 34 A4 3F** | 400-3-50 | 4p | 340 | 0.57 |

| Frame | Model | Power V-ph-Hz | $V_r$ poles | $P_{IN}$ W | $I_{IN}$ A |
|---|---|---|---|---|---|
| 4 | **AREO 42 A4 1F** | 230-1-50 | 4p | 623 | 2.73 |
| | **AREO 43 A4 1F** | 230-1-50 | 4p | 635 | 2.78 |
| | **AREO 44 A4 1F** | 230-1-50 | 4p | 655 | 2.87 |
| | **AREO 42 A4 3F** | 400-3-50 | 4p | 650 | 1.33 |
| | **AREO 43 A4 3F** | 400-3-50 | 4p | 690 | 1.35 |
| | **AREO 44 A4 3F** | 400-3-50 | 4p | 700 | 1.38 |
| 5 | **AREO 52 A6 1F** | 230-1-50 | 6p | 370 | 1.68 |
| | **AREO 53 A6 1F** | 230-1-50 | 6p | 374 | 1.72 |
| | **AREO 54 A6 1F** | 230-1-50 | 6p | 380 | 1.73 |
| | **AREO 52 A4 3F** | 400-3-50 | 4p | 725 | 1.4 |
| | **AREO 53 A4 3F** | 400-3-50 | 4p | 732 | 1.42 |
| | **AREO 54 A4 3F** | 400-3-50 | 4p | 755 | 1.5 |
| 6 | **AREO 62 A6 1F** | 230-1-50 | 6p | 555 | 2.4 |
| | **AREO 63 A6 1F** | 230-1-50 | 6p | 560 | 2.5 |
| | **AREO 64 A6 1F** | 230-1-50 | 6p | 582 | 2.55 |
| | **AREO 62 A6 3F** | 400-3-50 | 6p | 565 | 1.18 |
| | **AREO 63 A6 3F** | 400-3-50 | 6p | 575 | 1.2 |
| | **AREO 64 A6 3F** | 400-3-50 | 6p | 590 | 1.22 |

## 12 WIRING DIAGRAMS

9

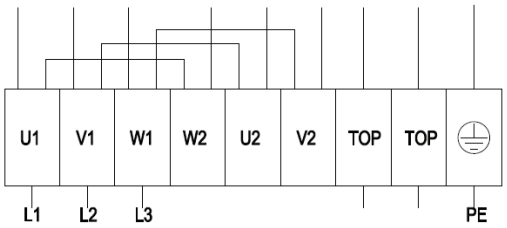


| | |
|---|---|
| Δ | Delta connection |
| **L1** | =U1=brown |
| **L2** | =V1=blue |
| **L3** | =W1=brown |
| **W2** | Yellow |
| **U2** | Green |
| **V2** | White |
| TOP | 2 X grey |
| PE | Green/Yellow |

10

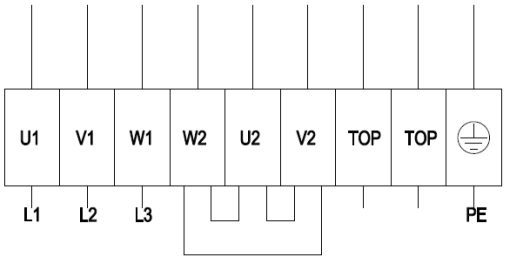


| | |
|---|---|
| **Y** | Star connection |
| **L1** | =U1=brown |
| **L2** | =V1=blue |
| **L3** | =W1=brown |
| **W2** | Yellow |
| **U2** | Green |
| **V2** | White |
| **TOP** | 2 X grey |
| PE | Green/Yellow |

11

### AREO 1-2-3

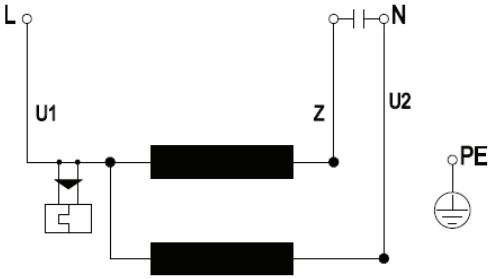


| | |
|---|---|
| **U1** | Blue |
| **PE** | Green/Yellow |
| **Z** | Brown |
| **U2** | Brown |

11

### AREO 4-5-6

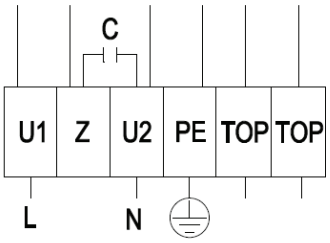


| | |
|---|---|
| **L** | =U1=Blue |
| **PE** | Green/Yellow |
| **Z** | Brown |
| **TOP** | Grey |
| **N** | =U2=Black |

12

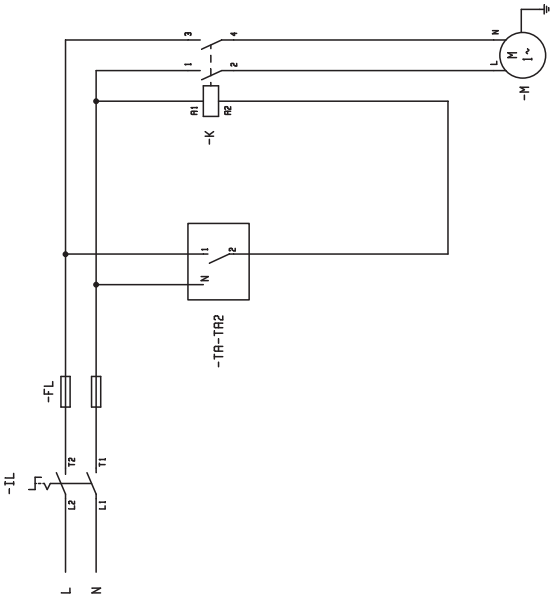


12

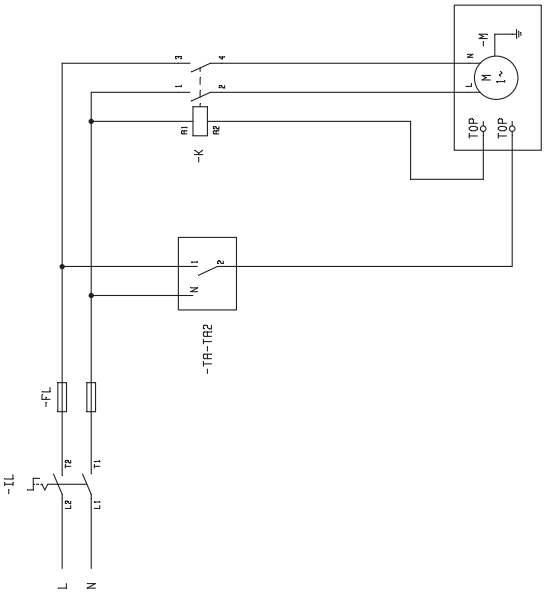

## 12 WIRING DIAGRAMS

13

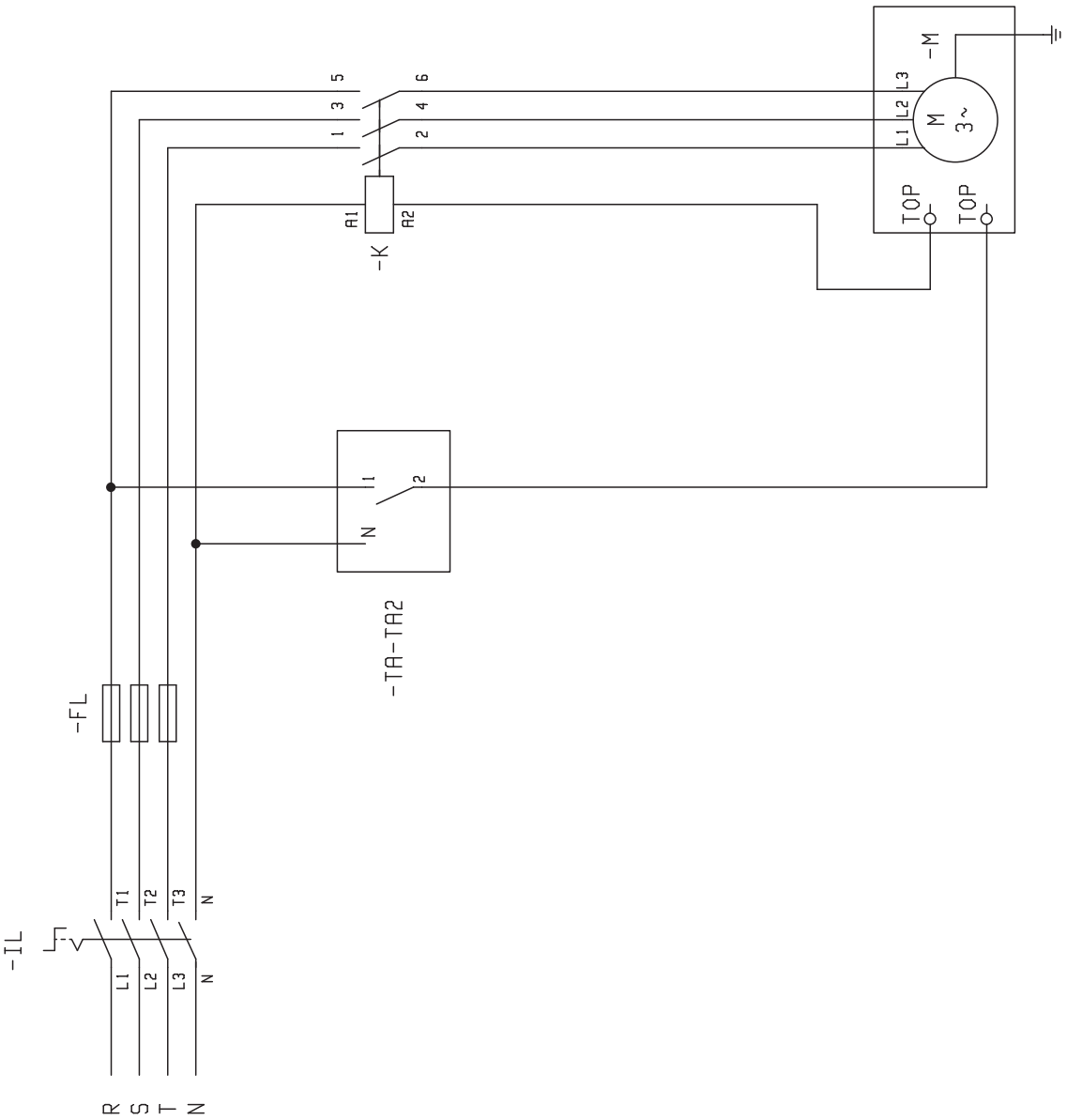


15

| | | |
|---|---|---|
| -FL | | FUSIBILI DI LINEA |
| -IL | L1 L2 T1 T2 | IL INTERRUTTORE DI LINEA |
| -K | | TELERUTTORE |
| -M | L N M 1~ -M | MOTORE AEROTERMO |
| -TA | | TERMOSTATO AMBIENTE |
| -RV | 1 2 -RV 4 3 | REGOLATORE VELOCITA' |

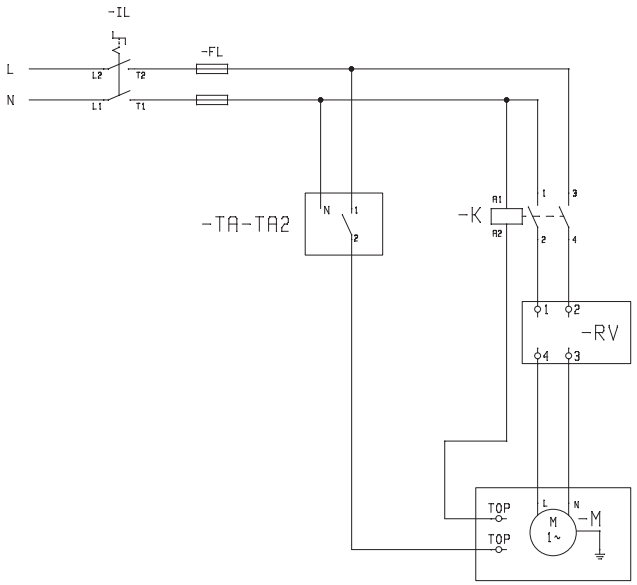

## 13 ACCESSORIES

**R - Protective mesh for gyms**
It protects the adjustable air outlet flaps when installed in gyms.

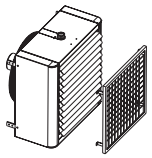

**D0 - Two-row fin diffuser**
The diffuser with one-row vertical fins makes it possible to adjust air diffusion horizontally (rightward and leftward).

**KP - Power interface for connecting in parallel up to 4 fan coil units to one control**
The KP interface is used to control up to 4 units (connected in parallel) by means of a single control panel. Suitable for mounting on DIN guides, it is usually installed in electric control panels.

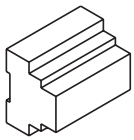

**CST - Delta/star selector for installation in electric panels**
Suitable for fan speed switching (delta= high and star= low) and fan heater switching off. It can be used with **AREO P 400V three-phase models.**

**CSTP - Delta/star selector with duct for wall mounting**
Suitable for fan speed switching (delta= high and star= low) and fan heater switching off. It can be used with **AREO P 400V three-phase models.** It is supplied complete with a cassette for wall mounting.

**TA - Room thermostat, wall-mounting**
Room temperature automatic control:
- for use in heating mode only, through the fan-drive assembly operation;
- for use in cooling mode only, through the fan-drive assembly operation;
- in heating and cooling modes, by means of the remote summer/winter selecting switch, through the fan-drive assembly operation.

**RVM - SINGLE-PHASE SPEED REGULATOR, WALL MOUNTING**
The RVM controls the effective value on the load by controlling the wave shape caused by a TRIAC. It is equipped with special filters (inductance and capacitor) in order to suppress noise induced on the supply line or irradiated from the equipment.

**CSD - Recess mounted control for opening and closing the motor-driven regulating valve PAE MM**
Designed for wall recess mounting, it controls the proportional opening and closing of the motor-driven regulating louver PAE MM (from 0 to 100%).

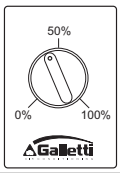


**PAE - External air intake**
It permits fresh air intake from the outside. It is supplied complete with wall brackets. It is usually mounted with the GR rain protection grille

**PAE M - Manual external air intake mixing louver**
Permits to mix recovered air with external fresh air.
The manual regulation permits to change the fresh air percentage from 0 to 100%.
This accessory is supplied with wall brackets. It is recommended to use it in conjunction with GR rain-protecting grille.

**PAE MM - Motor driven external air intake mixing louver**
Permits to mix recovered air with external fresh air.
Equipped with 24V proportional motor (complete with transformer) with spring return for automatic closure of louver in case of black out. The motor can be connected to external auxiliary contacts for closing and opening the louver automatically (evacuators, anti-freeze thermostats, etc.). For the

proportional opening and closing, the motor driven mixing louver should be coupled to the CSD control board.
This accessory is supplied with wall brackets. It is recommended to use it in conjunction with GR rain-protecting grille.

**GR - External air intake rain protection grille**
Made entirely of anodized aluminium, it is supplied with anti-volatile protection net.

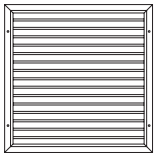

**DFP - Wall-mounting support template**
Built from thick sheet steel, it is installed on the support brackets provided on the back.

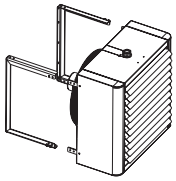

**DFC - Column-mounting support template**
Built from thick sheet steel, it is installed on the support brackets provided on the back.

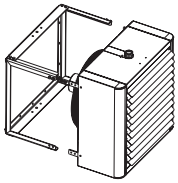

**DFO - Adjustable wall/column-mounting support template**
Wall or column mounting support template for Areo: during installation the rear bracket makes it possible to tilt the fan heater rightward or leftward for the diffusion of conditioned air in the desired direction.

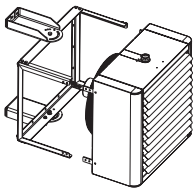

40010 Bentivoglio (BO) Via Romagnoli 12/a
Tel. +39 051 8908111 - Fax +39 051 8908122
www.galletti.it - info@galleti.it

Company UNI EN ISO 9001 and OHSAS 18001 certified